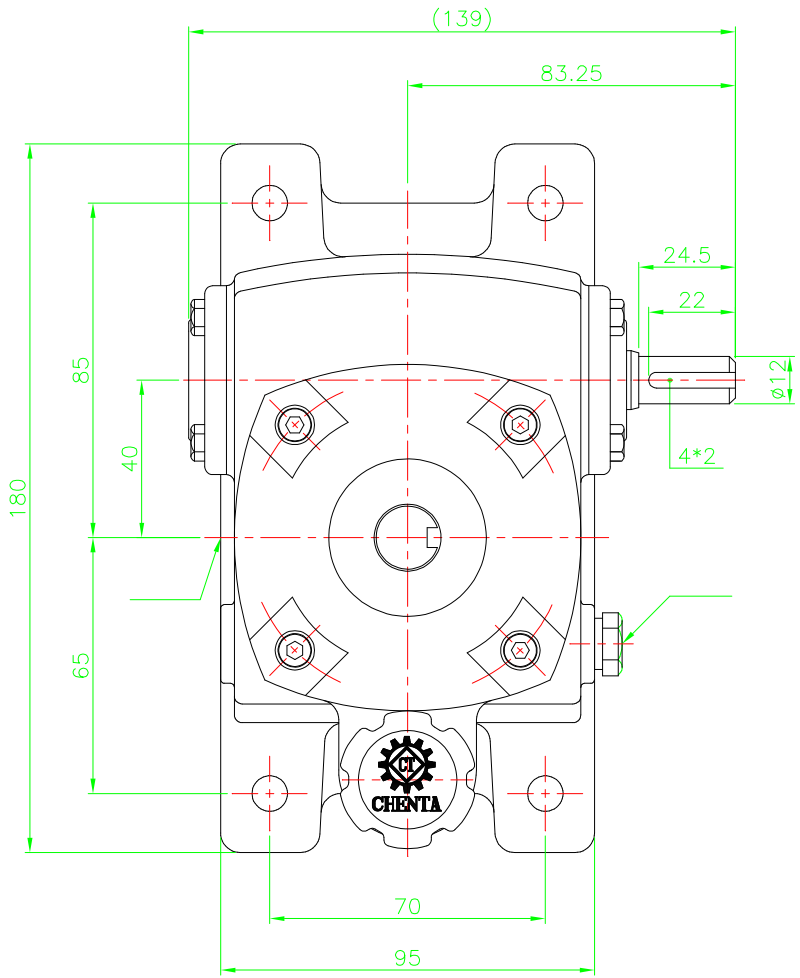

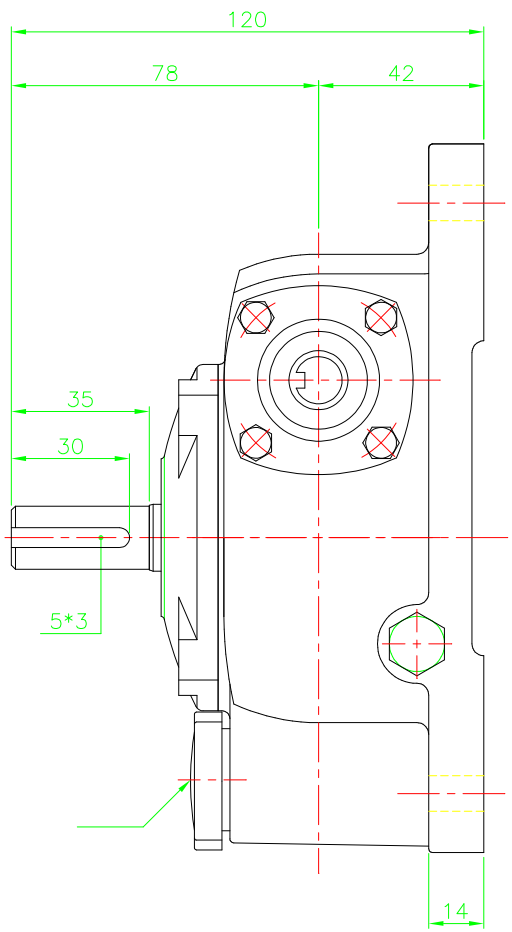

>0	±0.1
>6	±0.2
>30	±0.3
>120	±0.5
>315	±0.8
~	???
▽	50S
▽▽	25S
▽▽▽	6S
????	±0.5

?? ??????????

CT-ESS-040

ESS-404

1:2