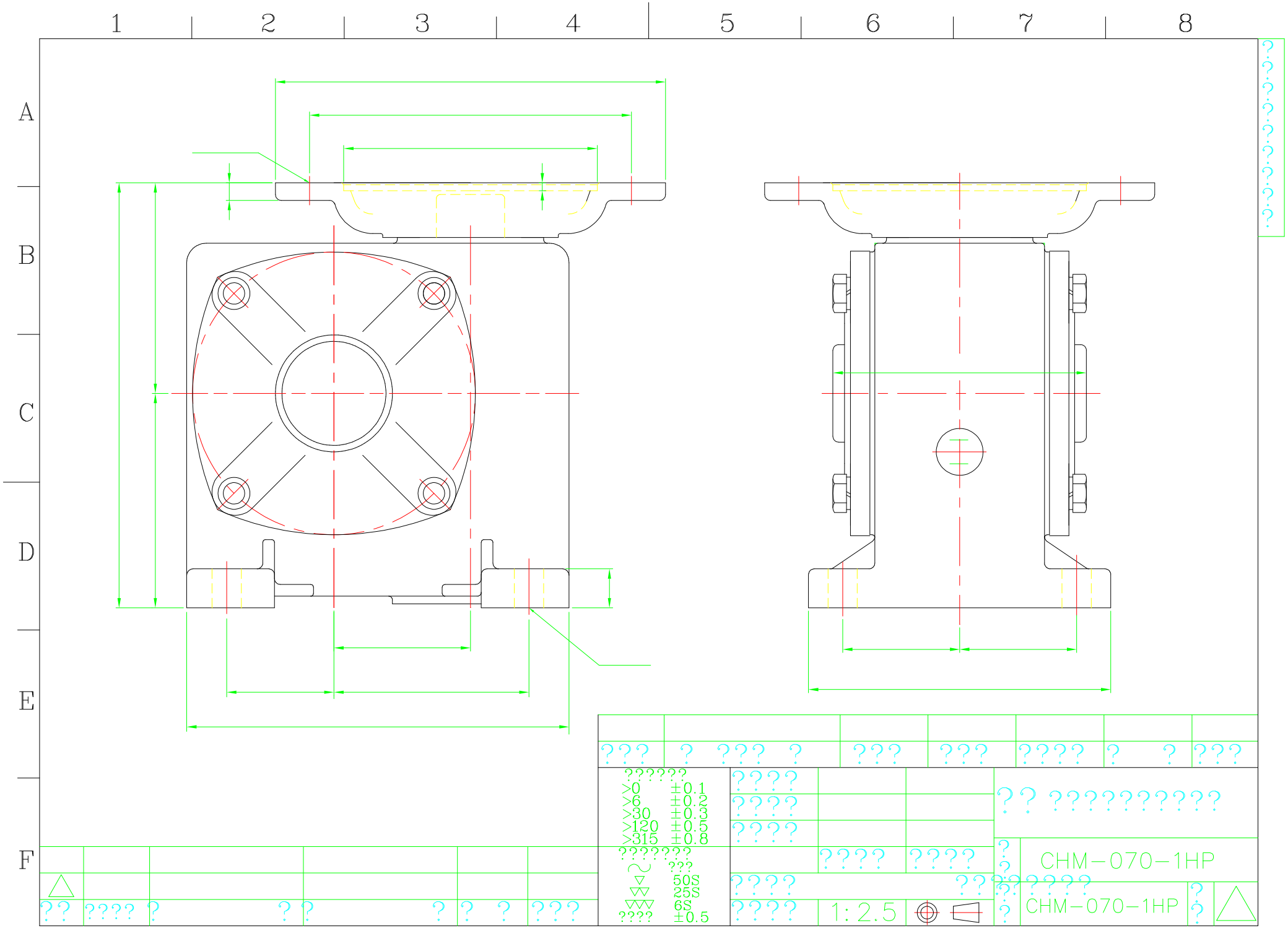
1 2 3 4 5 6 7 8
A B C D E F
??????
>0 ±0.1
>6 ±0.2
>30 ±0.3
>120 ±0.5
>315 ±0.8
????????
??
50S
25S
6S
???? ±0.5
1:2.5
?? ??????????
CHM-070-1HP
CHM-070-1HP