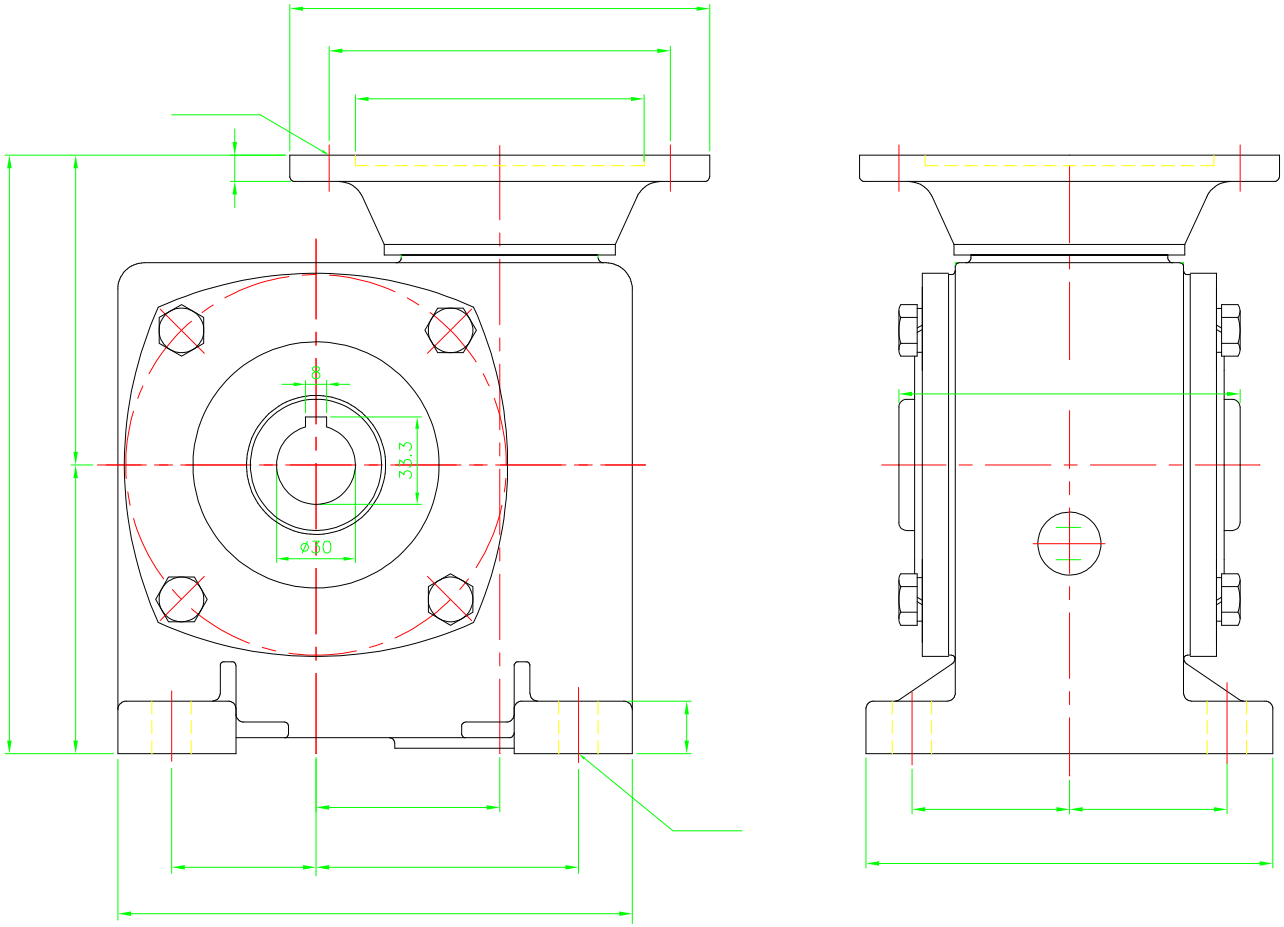


| | |
|---|---|
| ??????? | |
| >0 | ±0.1 |
| >6 | ±0.2 |
| >30 | ±0.3 |
| >120 | ±0.5 |
| >315 | ±0.8 |
| ???????? | |
| ~ | ??? |
| ▽ | 50S |
| ▽▽ | 25S |
| ▽▽▽ | 6S |
| ???? | ±0.5 |

?? ??????????

CHM-070-05HP

1:3

CHM-070-05HP